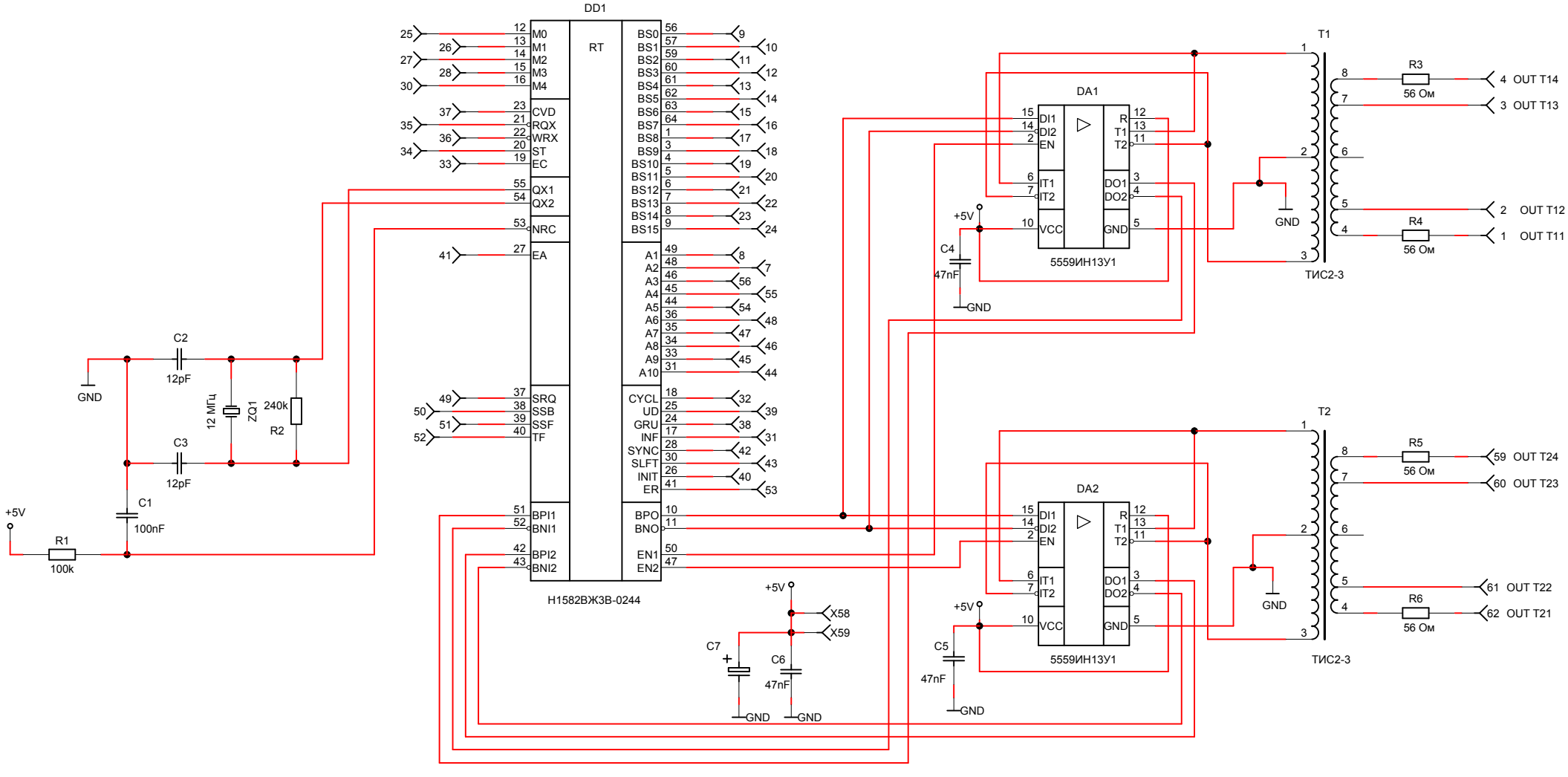
DD1
RT
M0
M1
M2
M3
M4
CVD
RQX
WRX
ST
EC
QX1
QX2
NRC
EA
SRQ
SSB
SSF
TF
BPI1
BNI1
BPI2
BNI2
BS0
BS1
BS2
BS3
BS4
BS5
BS6
BS7
BS8
BS9
BS10
BS11
BS12
BS13
BS14
BS15
A1
A2
A3
A4
A5
A6
A7
A8
A9
A10
CYCL
UD
GRU
INF
SYNC
SLFT
INIT
ER
BPO
BNO
EN1
EN2
Н1582ВЖ3В-0244
DA1
DI1
DI2
EN
IT1
IT2
VCC
R
T1
T2
DO1
DO2
GND
5559ИН13У1
DA2
5559ИН13У1
T1
T2
ТИС2-3
ТИС2-3
R3
R4
R5
R6
56 Ом
OUT T14
OUT T13
OUT T12
OUT T11
OUT T24
OUT T23
OUT T22
OUT T21
C1
100nF
C2
12pF
C3
12pF
C4
47nF
C5
47nF
C6
47nF
C7
R1
100k
R2
240k
ZQ1
12 МГц
+5V
GND
X58
X59